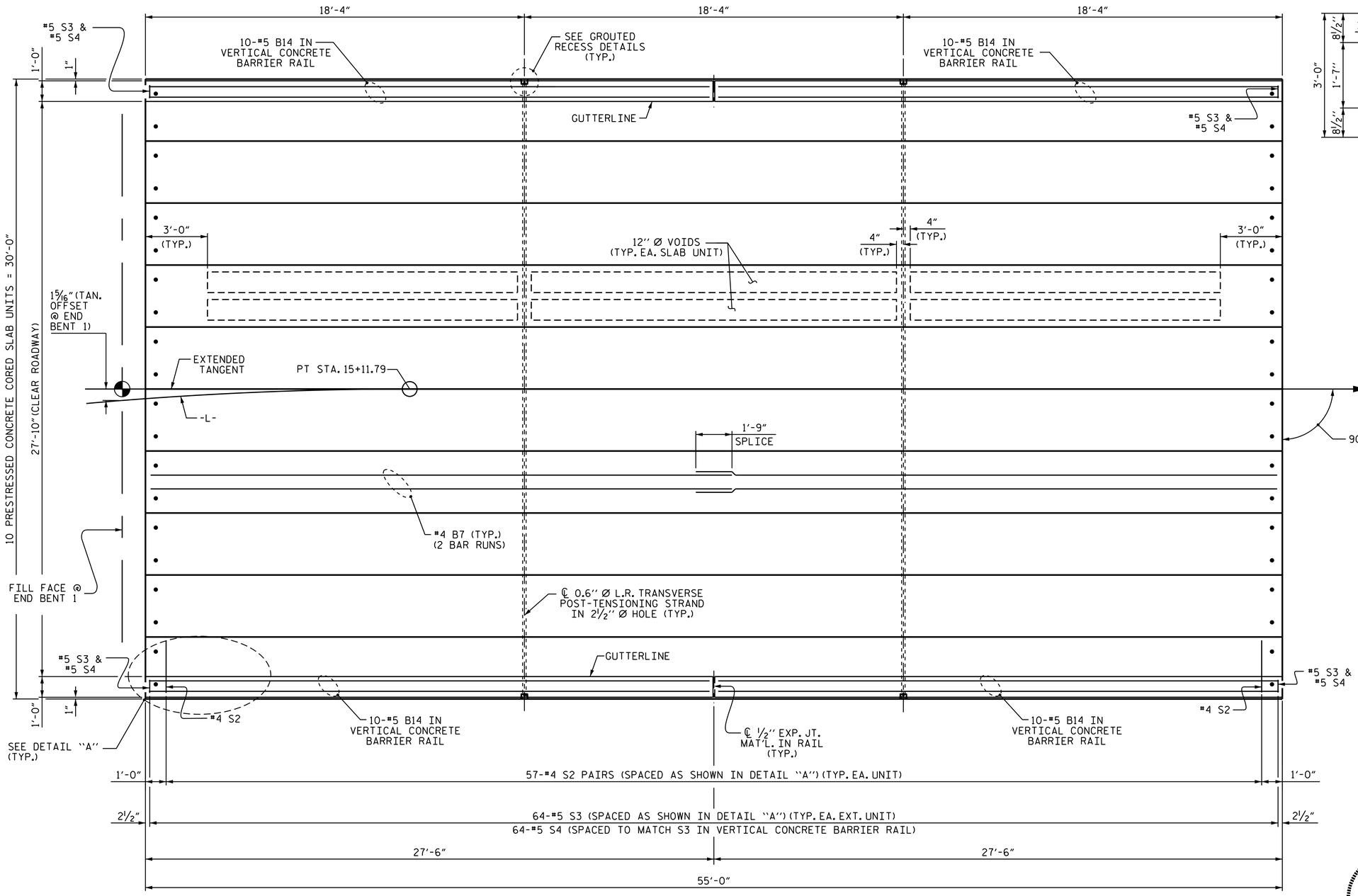

PLAN OF UNIT

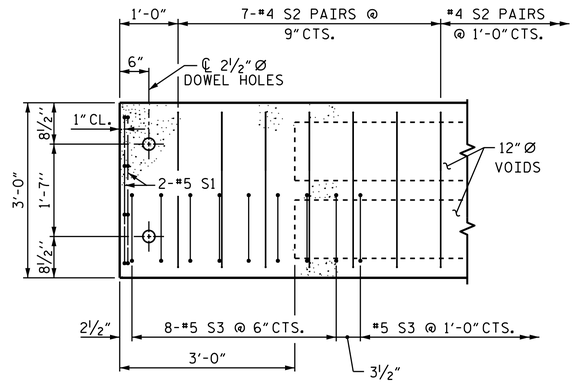

DETAIL "A"

(TYPICAL EACH END OF UNIT)
NOTE: EXTERIOR UNIT SHOWN - INTERIOR UNIT SIMILAR EXCEPT OMIT #5 S3 BARS.

PROJECT NO. 17BP.4.R.62

WAYNE COUNTY

STATION: 15+26.50 -L-

SHEET 2 OF 3

STATE OF NORTH CAROLINA
DEPARTMENT OF TRANSPORTATION
RALEIGH

PLAN OF 55' UNIT
27'-10" CLEAR ROADWAY
90° SKEW

NORTH CAROLINA PROFESSIONAL SEAL 40257 ENGINEER W. MATTHEW CLARKE

DocuSigned by: William M. Clarke
1EB20097EAAF437...
8/7/2015

ASSEMBLED BY : H.F. YEUNG		DATE :	6/15
CHECKED BY : W.M. CLARKE		DATE :	7/15
DRAWN BY : DGE	3/09	REV. 12/5/11	MAA/AAC
CHECKED BY : BCH	3/09	REV. 8/14	MAA/TMG

REVISIONS						SHEET NO.
NO.	BY:	DATE:	NO.	BY:	DATE:	S-5
1			3			TOTAL SHEETS
2			4			13

06-AUG-2015 08:57
S:\DPG1\Division4\17BP4R62\17BP4R62_92_SD_CS.dgn
kpaschal

STD. NO. 21" PCS_30_90S_55L