NOTES :

FOR BERM WIDTH DIMENSIONS, SEE GENERAL DRAWING.

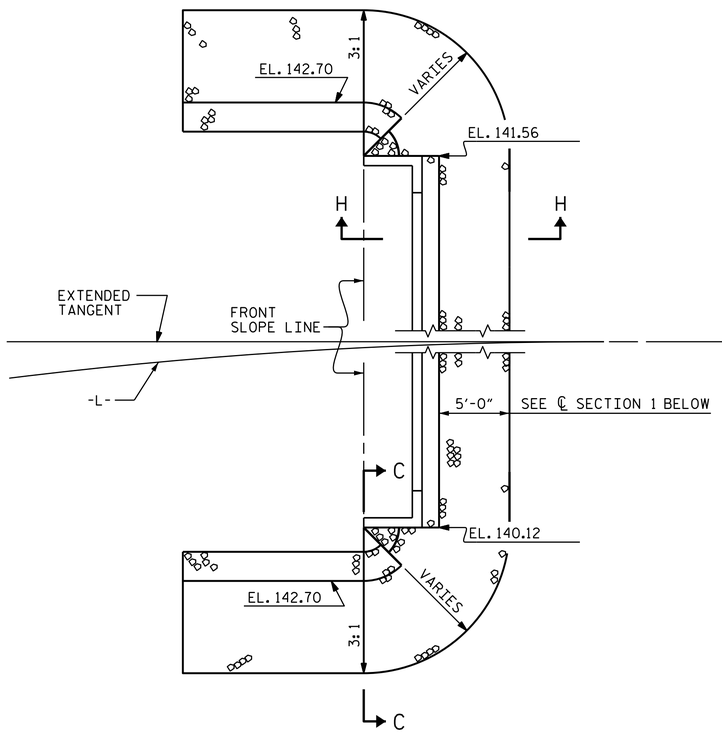

END BENT 1

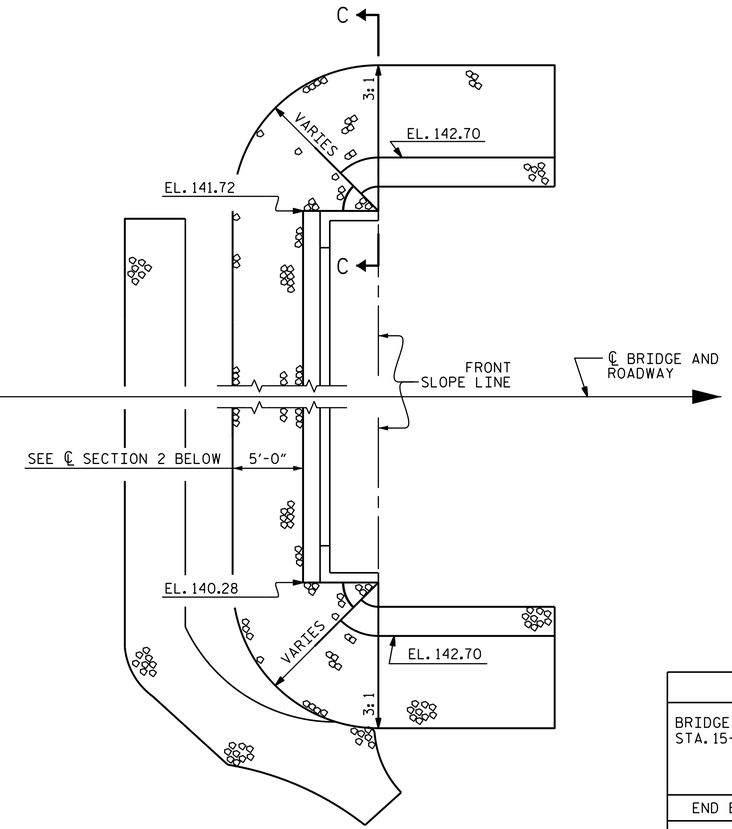

END BENT 2

ESTIMATED QUANTITIES		
BRIDGE @ STA. 15+26.50 -L-	RIP RAP CLASS II	GEOTEXTILE FOR DRAINAGE
	TONS	SQUARE YARDS
END BENT 1	84	79
END BENT 2	124	129

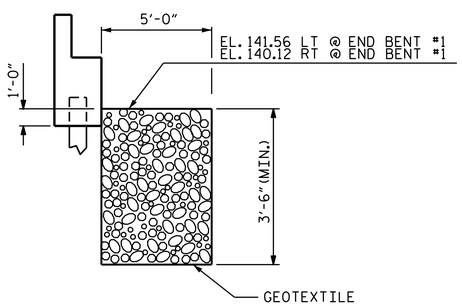

℄ SECTION 1

BERM RIP RAPPED

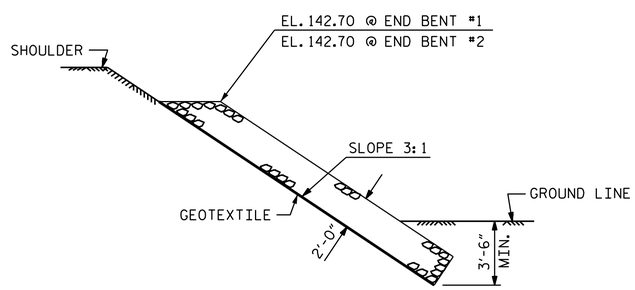

SECTION C-C

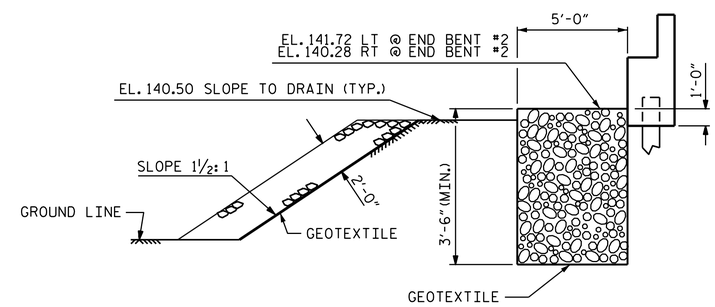

℄ SECTION 2

BERM RIP RAPPED

PROJECT NO. 17BP.4.R.62

WAYNE COUNTY

STATION: 15+26.50 -L-

STATE OF NORTH CAROLINA
DEPARTMENT OF TRANSPORTATION
RALEIGH

STANDARD

RIP RAP DETAILS

NORTH CAROLINA PROFESSIONAL SEAL 40257 ENGINEER W. MATTHEW CLARKE

DocuSigned by: William M. Clarke
1EB20097EAAF437...

9/1/2015

ASSEMBLED BY :	H.F. YEUNG	DATE :	7/15
CHECKED BY :	W.M. CLARKE	DATE :	7/15
DRAWN BY : REK 1/84	REV. 5/1/06R		TLA/GM
CHECKED BY : RDU 1/84	REV. 10/1/11		MAA/GM
	REV. 12/21/11		MAA/GM

REVISIONS						SHEET NO.
NO.	BY:	DATE:	NO.	BY:	DATE:	S-12
1			3			TOTAL SHEETS
2			4			13

01-SEP-2015 11:59
S:\DPG1\Division4\17BP4R62\17BP4R62_92_SD_CS.dgn
wmclarke

STD. NO. RR1 (Sht 2)