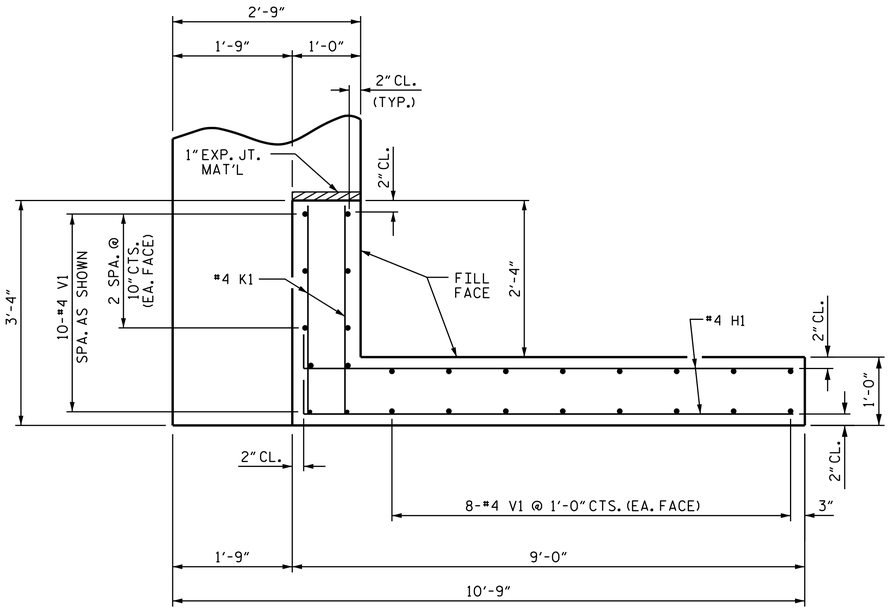

PLAN OF WING (W1)

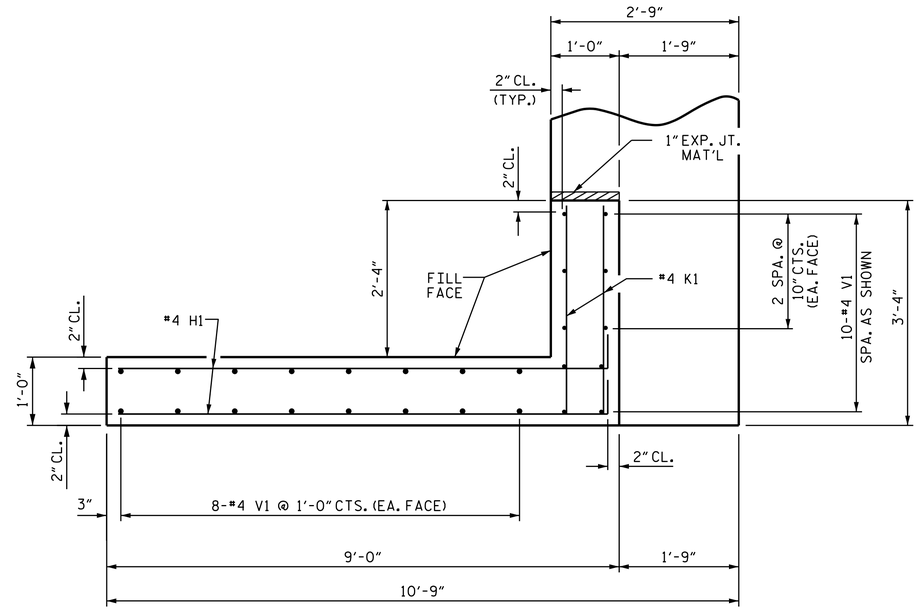

PLAN OF WING (W2)

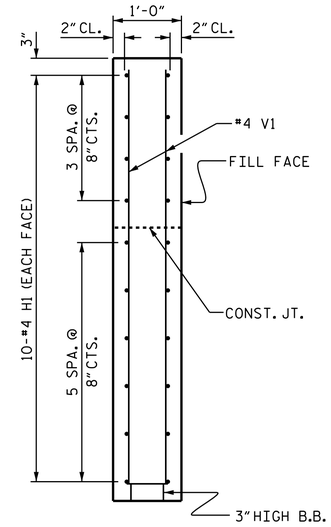

SECTION X-X

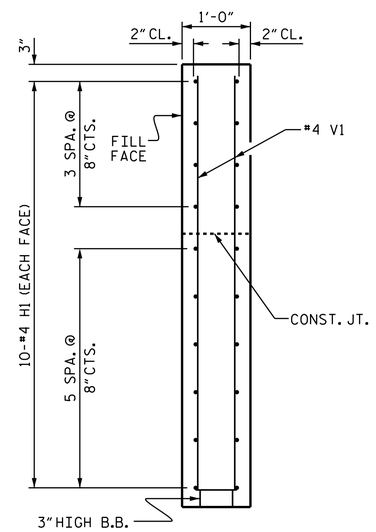

SECTION Y-Y

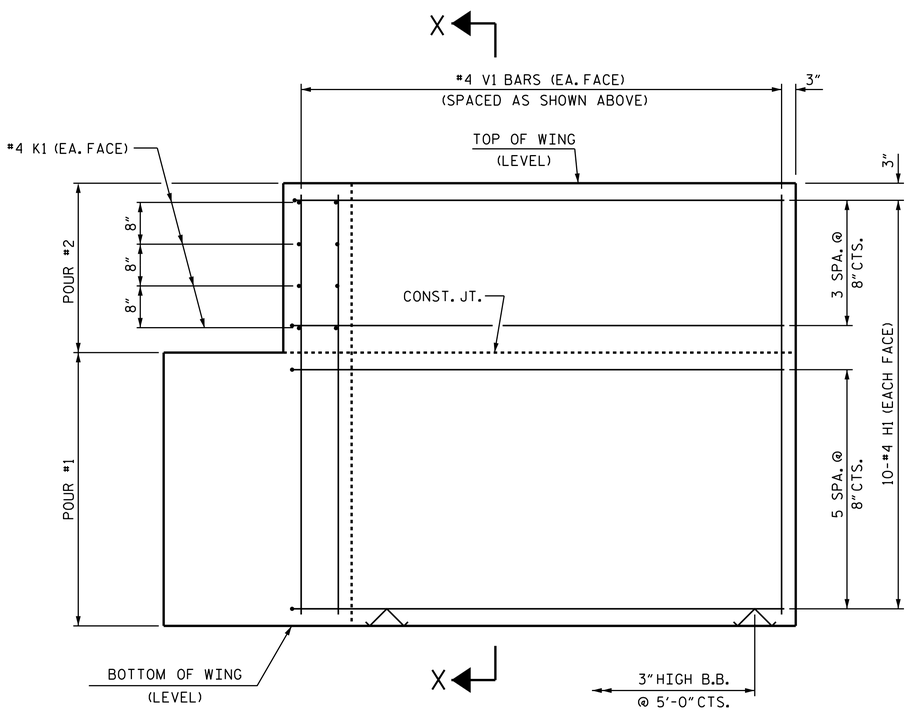

ELEVATION OF WING (W1)

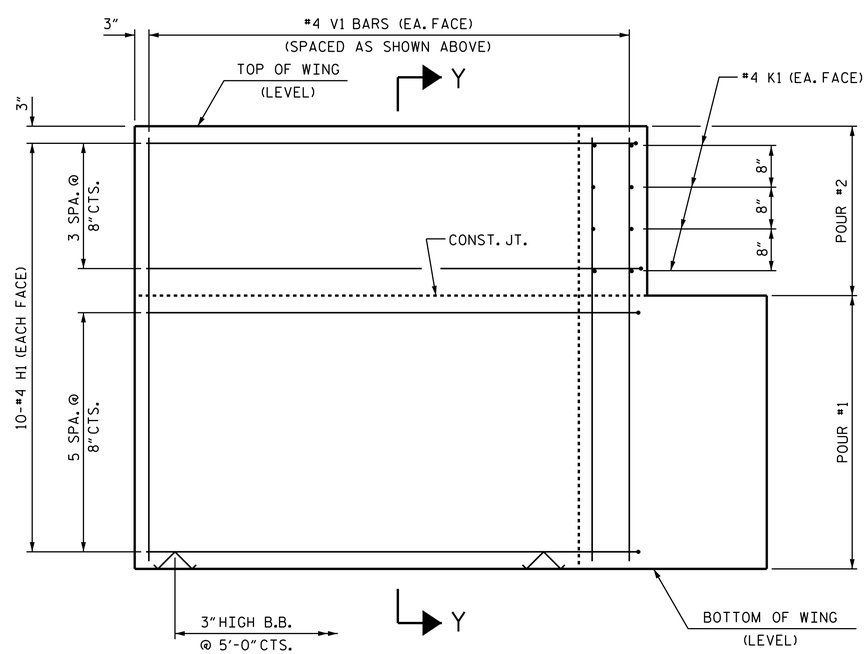

ELEVATION OF WING (W2)

WING DETAILS

PROJECT NO. 17BP.4.R.62

WAYNE COUNTY

STATION: 15+26.50 -L-

SHEET 3 OF 4

NORTH CAROLINA PROFESSIONAL SEAL 40257 ENGINEER W. MATTHEW CLARKE

DocuSigned by: William M. Clarke 1EB20097EAAF437...

8/7/2015

STATE OF NORTH CAROLINA
DEPARTMENT OF TRANSPORTATION
RALEIGH

SUBSTRUCTURE

END BENT
WING DETAILS

REVISIONS							SHEET NO.
NO.	BY:	DATE:	NO.	BY:	DATE:		S-10
1			3				TOTAL SHEETS
2			4				13

ASSEMBLED BY : H.F. YEUNG		DATE : 7/15	
CHECKED BY : W.M. CLARKE		DATE : 7/15	
DRAWN BY : WJH 12/11	REV. 4/15	MAA/TMG	
CHECKED BY : AAC 12/11			

06-AUG-2015 08:57
S:\DPG1\Division4\17BP4R62\17BP4R62_92_SD_CS.dgn
kpaschal

STD. NO. EB_30_90S4